Installation & Instruction Manual

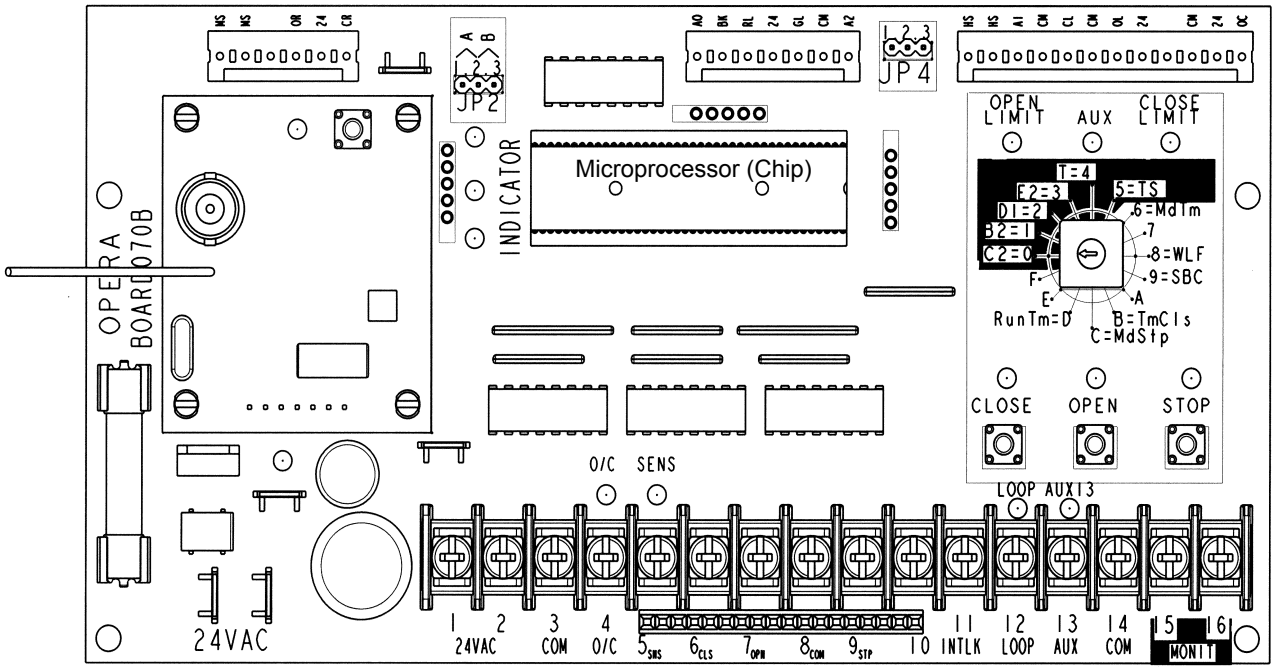

Electrical control for monitored external entrapment protection devices (BOARD 070M)

UL 325
CSA C22.2-247.92

RADIO RECEIVER ON-BOARD

READ AND FOLLOW ALL INSTRUCTIONS.
SAVE THESE INSTRUCTIONS.
GIVE TO END-USER.

Serial # _____

Model # _____

Wiring Diagram # _____

Project #/Name _____

Door #/Name _____

For technical support, please call **1-800-361-2260** or visit **www.manaras.com** for more information

Table of Contents

Installation Instructions

1 Electrical Wiring

⚠ WARNING

To reduce risk of SEVERE INJURY or DEATH to persons:

- All electrical wiring should be done by a qualified professional and in accordance to local electrical codes.
- Always shut OFF the main power before performing any electrical intervention.
- Use proper wire gauge for incoming power line and for accessory connections.
- Install operator main circuit breaker next to operator for easy access for power shut-off.
- Use separate knockouts on operator control box for accessories and main power cables.
- Always separate low and high voltage wires.
- Operator should be properly grounded to the building ground and to the main power supply ground lug.
- Always use suitable and appropriate rating circuit breakers for operator protection.
- Compare available power supply voltage to voltage on operator name plate prior to electrical connection. Failure to connect appropriate power supply voltage may cause serious damage to the operator.

NOTICE

- The installer MUST test for proper connection and functionality of the operator and its accessories before leaving the job site.
- The installer should also perform a demonstration for the end-user.

1.1 Main Power Supply Connection

Single-Phase (115/230V)	Three-Phase (208/230-460-575V)
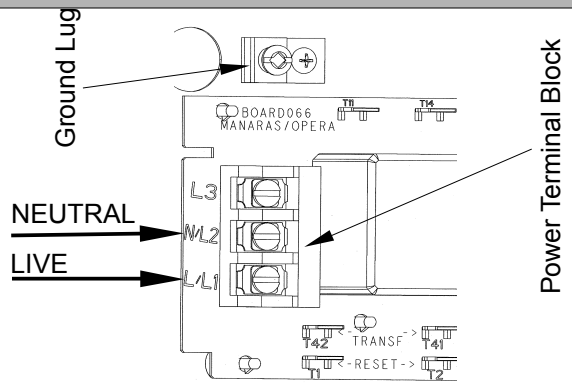	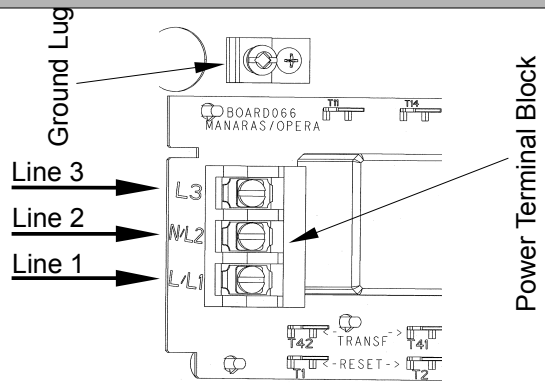
Correct motor rotation: Switch the BLUE and ORANGE motor wires on the power board.	Correct motor rotation: Switch ANY TWO incoming lines (phase) on the power terminal block.

1.2 On Board Jumper Settings - JP2 Set-Up

For medium-duty operators (OMH, OMJ and OMT), JP2 must be set on 2 and 3.

For other models, JP2 must be set on 1 and 2 for single phase operators, or set on 2 and 3 for 3 phase operators.

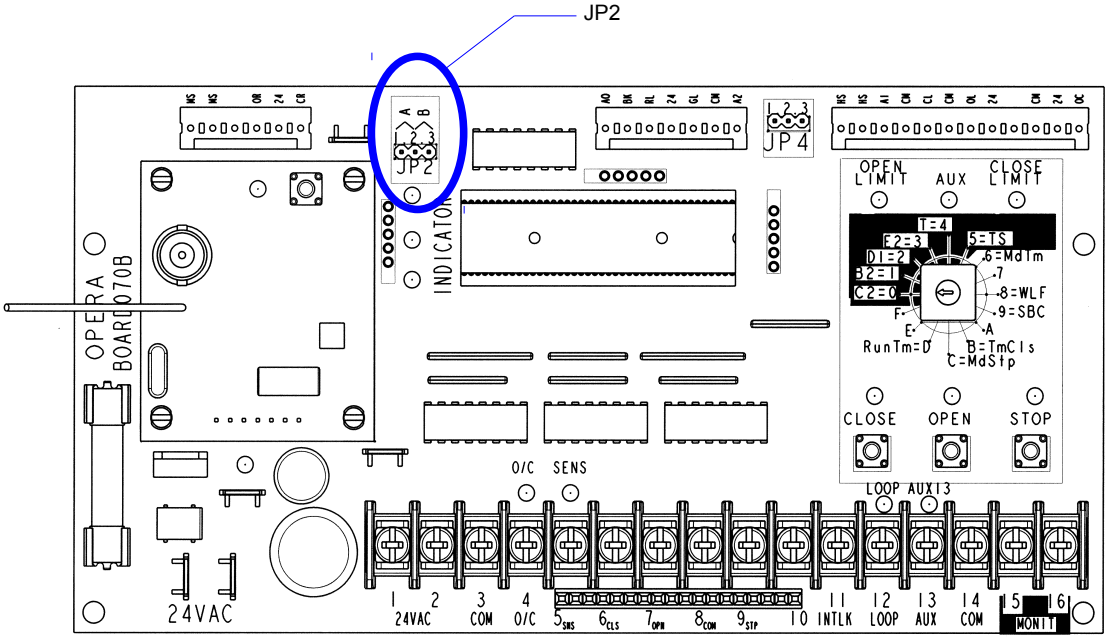

Figure 1 - Electronic Control Board – BOARD 070

1.3 Wall-Button Connection

⚠ WARNING

- Wall controls must be mounted in clear view of the door, far enough from the door, or positioned such that the user is prevented from coming in contact with the door while operating the controls and at least 5 feet (1,5 m) above the standing surface.
- Keep low voltage wires separate from line voltage wires.
- Use copper conductors only.

Push-Button Station (PBS) Connection

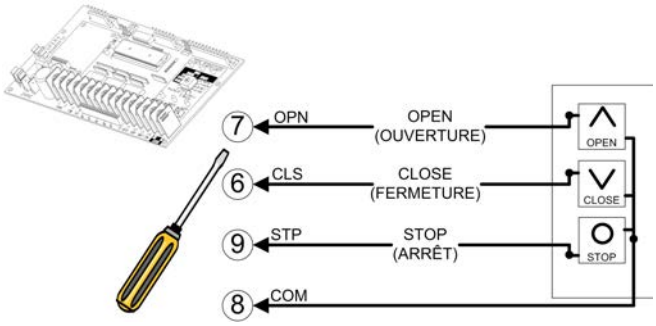

Figure 2 - STATION 020 / 084
3-PBS Open / Close / Stop

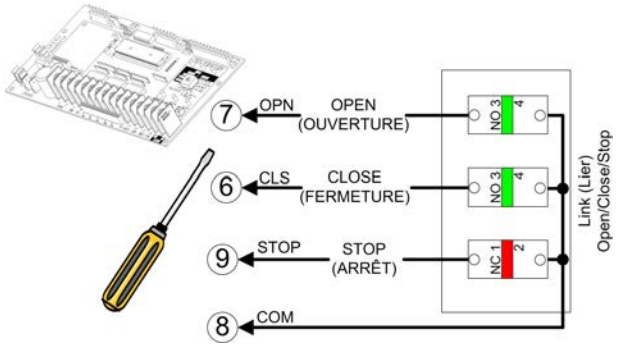

Figure 3 - STATION 041 / 049 / 056 / 076 / 078
3-PBS Open / Close / Stop

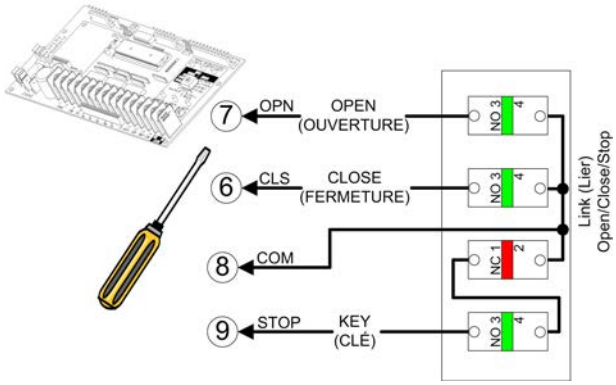

Figure 4 - STATION 079
3-PBS Open / Close / Stop with Key Lock-out

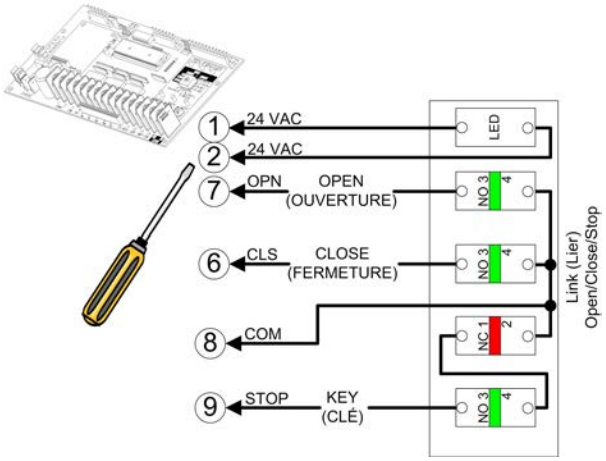

Figure 5 - STATION 080
3-PBS Open / Close / Stop with Key Lock-out and Light

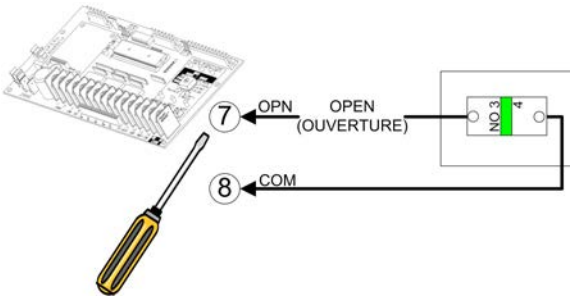

Figure 6 - STATION 001 / 081
1-PBS Open

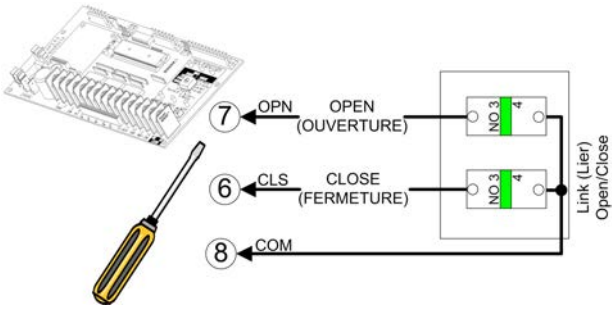

Figure 7 - STATION 010 / 082
2-PBS Open / Close

1.4 Monitored External Entrapment Protection Device Connection

NOTICE

- Do NOT connect more than one (1) monitored entrapment protection device simultaneously on the MONIT terminals.
- Photo cells must be installed facing each other across the door's path within 6” (15 cm) of the plane of the door and the beam no more than 5-3/4” (14,6 cm) above the floor.
- If a non-monitored photo cell, pneumatic edge or electrical reversing edge is used instead of a monitored entrapment protection device, the operator will ONLY function in C2 (constant-pressure-to-close) mode. Radio or open/close controls will only open the door.

Monitored Photo Cell (supplied with operator) – PHOTO 062

(Manufactured by Martec / UL File # E325114 / p/n:1266-224)

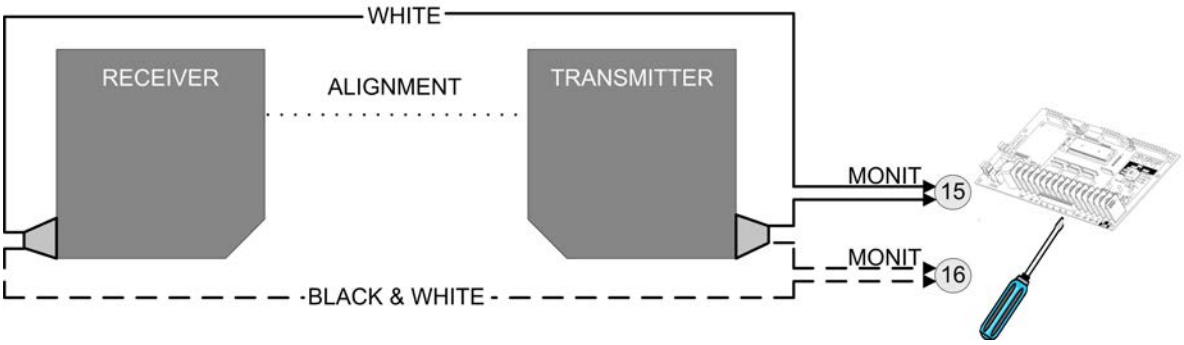

Figure 8 - PHOTO 062 or PHOTO 064 Installation

For further information, please consult the entrapment device installation manual for placement of the sensors.

Other Suitable Monitored Photo Cells Available

- **PHOTO 064 :** Nema 4 photo cells, through beam type.
  (Manufactured by Martec / UL File # E325114 / p/n: 1266-225)
- **PHOTO 061 :** Nema 4X photo cells, use in industrial environments, submersible and impact resistant, through beam type. (Manufactured by Fraba / UL File # E323938 / p/n: OSE-T or OSE-R or OPE)
- **PHOTO 070 :** Nema 4 photo cells, through beam type.
  (Manufactured by Fraba / UL File # E323938 / p/n: RAY-NS 1001)

For further information, please consult the entrapment device installation manual for placement of the sensors.

Please contact your dealer or our inside sales department at **1-800-361-2260** for further information.

1.5 Optional Accessory Connections

NOTICE

- Photo cells must be installed facing each other across the door's path within 6” (15 cm) of the plane of the door and the beam no more than 5-3/4” (14,6 cm) above the floor.
- Keep low voltage wires separate from line voltage wires.
- Use copper conductors only.

1.5.1 Electric Photo Cells / Photo Eyes (Non-Monitored)

Through Beam Type

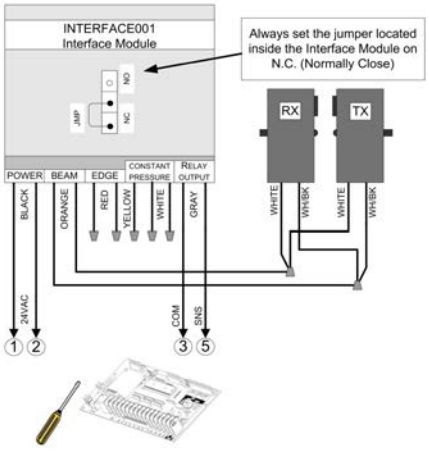

Figure 9 - PHOTO 008A/B

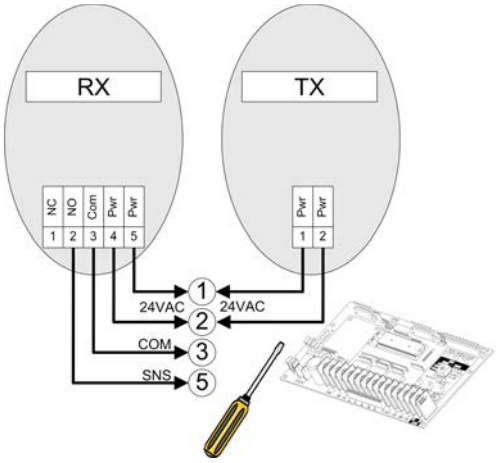

Figure 10 - PHOTO 015 / 016 / 045 / 050 / 051 / 059

Reflective Type

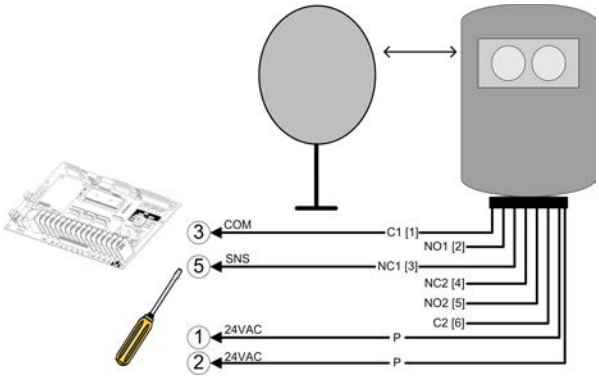

Figure 11 - PHOTO 018

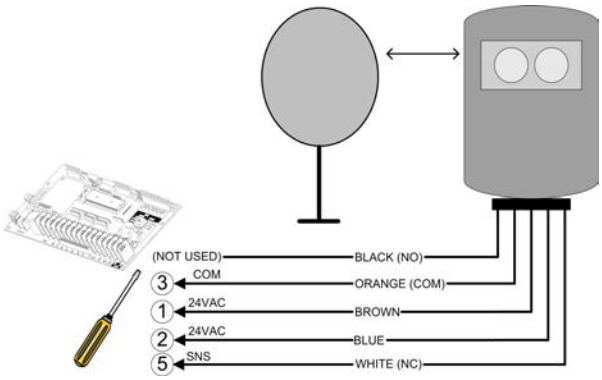

Figure 13 - PHOTO 038

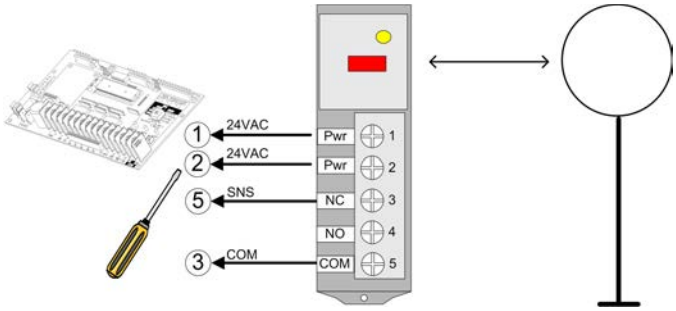

Figure 12 - PHOTO 060

1.5.2 Reversing Edge Device (Non-Monitored)

NOTICE

- If the door is controlled by any device other than a constant pressure push-button station on close, including a timer-to-close, a reversing edge must be connected.

Installation

Pneumatic Sensing Edge

1. Place the air switch in position, refer to Figure 14.
2. Place the air hose in position.
3. Use a coil cord or take-up reel to connect the air switch to the operator terminals. Install electric wires according to Figure 15 or Figure 16.
4. Connect one end of the air hose to the air switch.
5. Place the air plug in the other end of the air hose.

Electric Sensing Edge

1. Place the junction box in position, refer to Figure 14.
2. Place the sensing edge in position.
3. Use a coil cord or take-up reel to connect the sensing edge wires to the operator terminals. Install electric wires according to Figure 17.
4. Connect the sensing edge to the junction box.
5. N/A

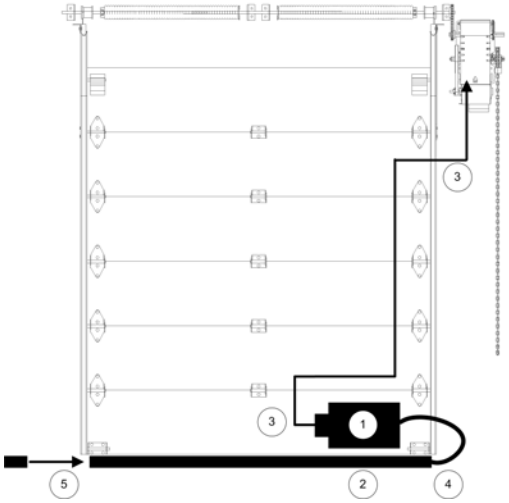

Figure 14 - Reversing Edge

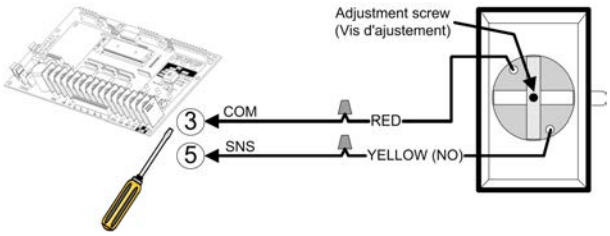

Figure 15 - AIRSWITCH 001 / 007

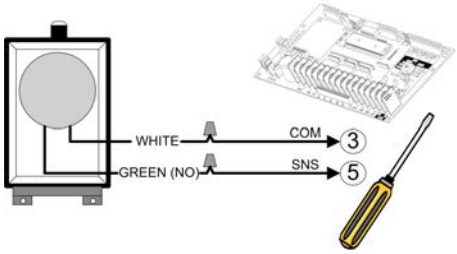

Figure 16 - AIRSWITCH 009

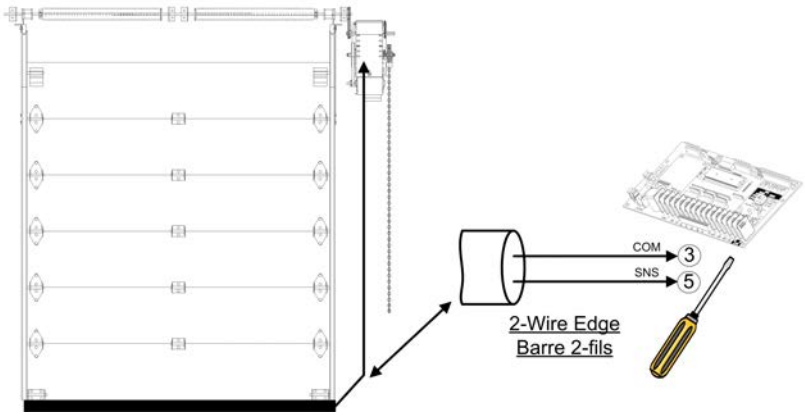

Figure 17 - Electric Reversing Edge

1.5.3 Pull Cord & Key Switch

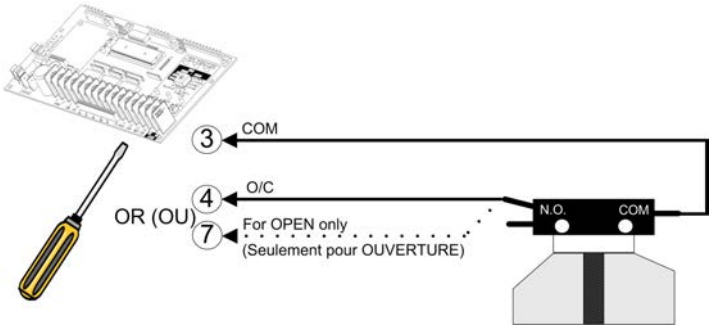

Figure 18 - PULLCORD 001 / 003 / 004 / 007

2-Position Key Switch

Recommendation: Put Control Board on C2 or E2 Mode (constant-pressure-to-close)

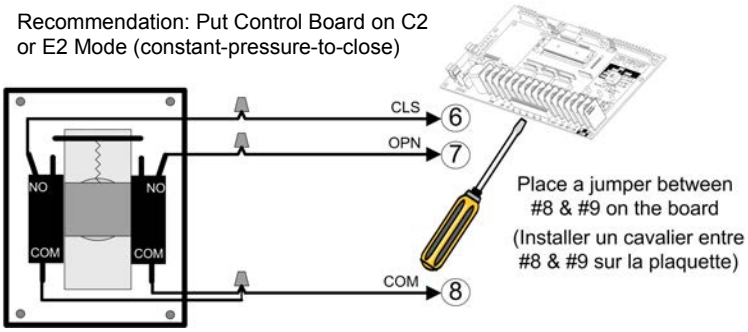

Figure 19 - KEYSWITCH 010 / 015

2-Position Key Switch & Stop Button

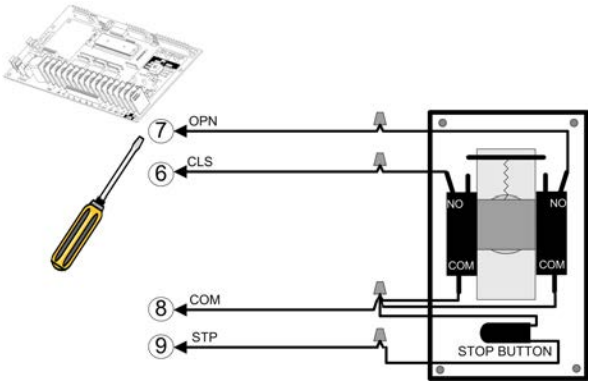

Figure 20 - KEYSWITCH 019

1.5.4 Vehicle Loop Detector

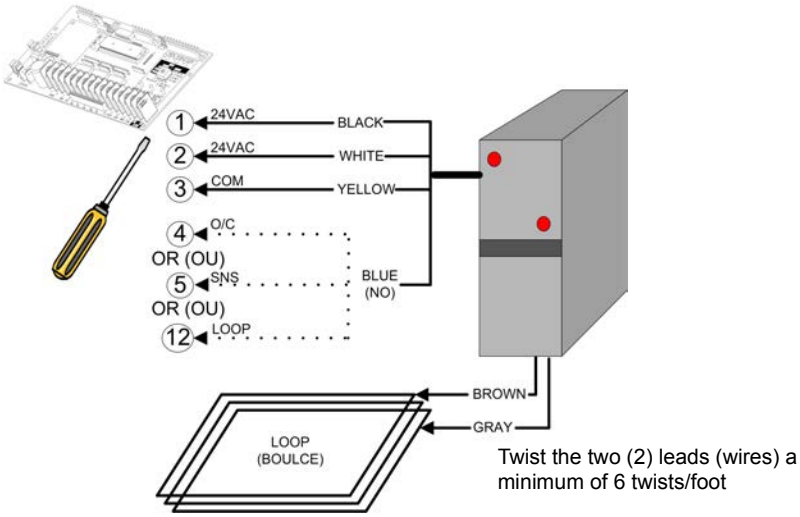

Figure 21 - Vehicle Loop Detector

1.5.5 Other Accessories

Additional accessories are available, such as:

- Universal Auxiliary Output Module
- External Mid-Stop Switch
- External Timer Defeat Switch

Please contact your dealer or our inside sales department at **1-800-361-2260** for further information.

2 Electrical Drawings

2.1 External Wiring with BOARD 070M

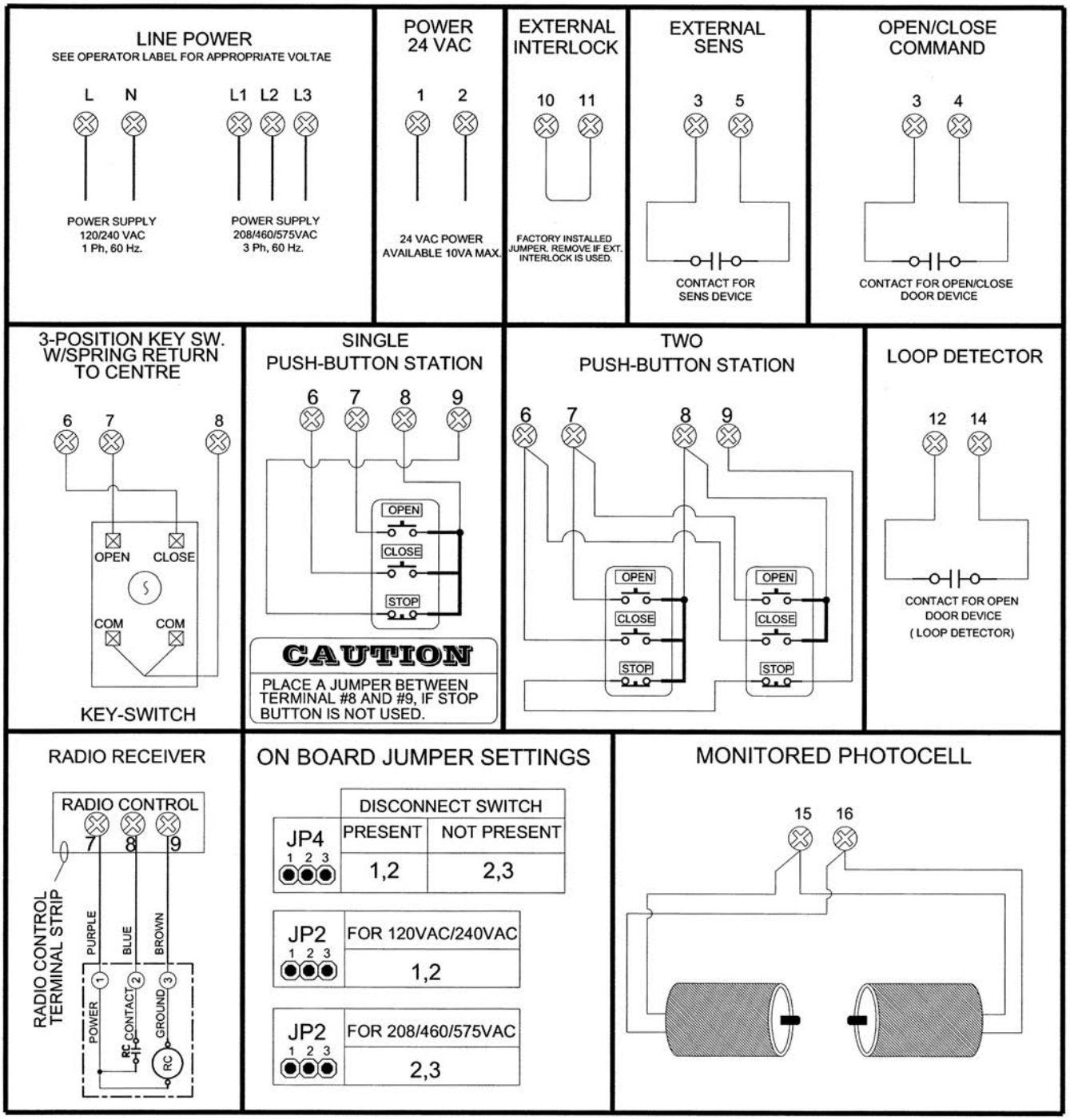

Figure 22 - External Wiring

For JP2 on-board jumper settings for medium-duty models (OMH, OMJ and OMT), refer to section 1.2, p.4 as reference.

User Instructions

IMPORTANT SAFETY INSTRUCTIONS

⚠ WARNING

TO REDUCE THE RISK OF SEVERE INJURY OR DEATH TO PERSONS:

1. READ AND FOLLOW ALL INSTRUCTIONS.
2. Never let children operate or play with door controls. Keep the remote control (where provided) away from children.
3. Personnel should keep away from a door in motion and keep the moving door in sight until it is completely closed or opened. NO ONE SHOULD CROSS THE PATH OF A MOVING DOOR.
4. Test the door's safety features at least once a month. After adjusting either the force or the limit of travel, retest the door operator's safety features. Failure to adjust the operator properly may cause severe injury or death.
5. For products having a manual release, if possible, use the manual release only when the door is closed. Use caution when using this release with the door open. Weak or broken springs may cause the door to fall rapidly, causing severe injury or death.
6. KEEP DOORS PROPERLY OPERATING AND BALANCED. See Door Manufacturer's Owner Manual. An improperly operating or balanced door could cause severe injury or death. Have trained door systems technician make repairs to cables, spring assemblies and other hardware.
7. SAVE THESE INSTRUCTIONS.

IMPORTANT
For more information or for immediate assistance, please contact your local dealer.

1 Electronic Control Board (ECB) – BOARD 070M

1.1 General Layout

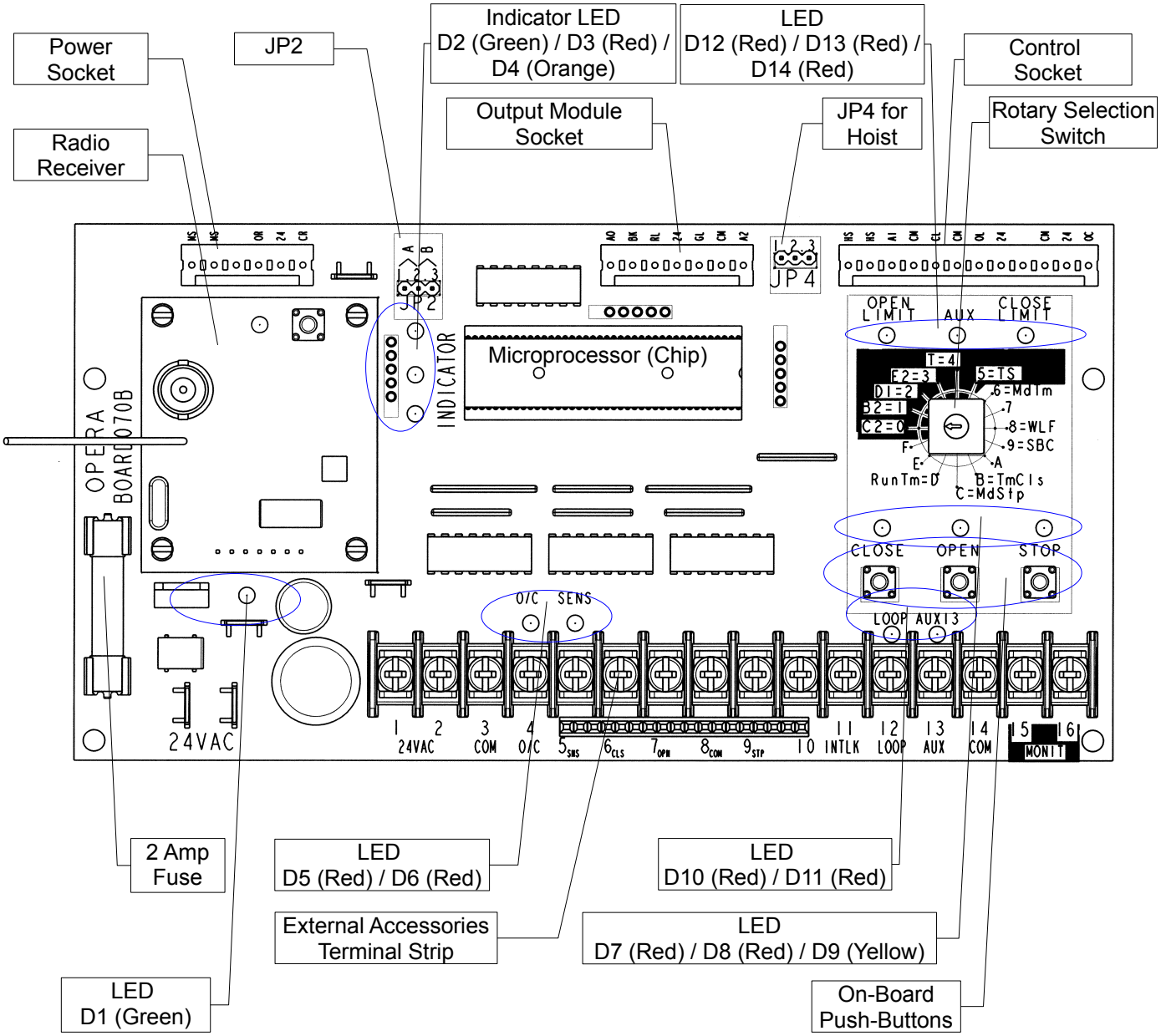

Figure 23 - Electronic Control Board – BOARD 070M

1.2 On-Board LED Monitoring Status

The electronic control board's LEDs help with wiring and troubleshooting diagnostics. Every LED indicates the status of the door. BOARD 070M has a non-volatile memory and the LEDs return to their initial state after a power interruption. Refer to Figure 23, p.12 as reference.

Table 1 - LED Monitoring Status

LED	LED ON	Functions
D1	**GREEN**	Indicates presence of 24VDC.
D2 / D3	Refer to Table 2, p.14 as reference.	
D4	**ORANGE**	Indicates monitored photo cell activation or absence of monitored photo cell or defective photo cell.
D5	**RED**	Only when single-button radio transmitter is activated *(stays ON for +/- 1 sec).*
D6	**RED**	When reversing or sensing edge is activated.
D7	**RED**	When close command is activated.
D8	**RED**	When open command is activated.
D9	**YELLOW**	Indicates that the stop button is connected and hoist or disconnect switch is not engaged.
D10	**RED**	When inductive loop (Terminal #12) is activated *(when loop is activated, door could be closed only on constant pressure).*
D11	**RED**	When external timer to close defeat switch is activated *(if used).*
D12	**RED**	When open limit switch is activated.
D13	**RED**	When external mid-stop limit switch is activated *(if used).*
D14	**RED**	When close limit switch is activated.

1.2.1 D2 / D3 LED Monitoring Status Combination Scenarios

Table 2 - D2/D3 LED Monitoring Status - Combination Scenarios

Scenario	D2 LED GREEN	D3 LED RED	Functions
1	**OFF**	**OFF**	Indicates a DC power failure.
2	**OFF**	**Flash**	When door is closing.
3	**ON**	**OFF**	When operator is on standby.
4	**ON**	**Flash**	Indicates wrong handling feature activation *(if a limit switch is not released/deactivated within 3.6 sec while door starts to close/open from the fully open/closed positions).*
5	**ON**	**ON**	Indicates a faulty motor centrifugal switch *(single-phase only)*.
6	**Flash**	**OFF**	When door is opening.
7	**Flash**	**Flash**	When timer to close is counting before closing the door.
8	**Flash**	**Flash**	When door is opening during programming of the run timer or the mid-stop features. Refer to section 1.3.2, p.16 as reference.

1.3 Electronic Control Board (ECB) Programming

1.3.1 Run Mode Settings

NOTICE

• Always return the door to **fully closed position** before performing any program settings.

C2 Mode	SET SELECT SWITCH ON *C2 = 0*	E2 Mode	SET SELECT SWITCH ON *E2 = 3*
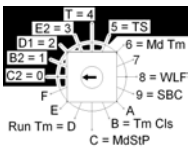 Selector switch position on **0**	**Function:** Momentary contact to open and stop, constant-pressure-to-close with 3-button station. Activation of monit./entrapment protection devices will reverse the door while closing. Auxiliary devices function as an Open control and will reverse the door while closing.	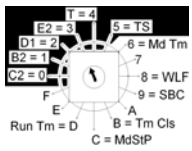 Selector switch position on **3**	**Function:** Momentary contact to open and constant pressure to Close. Release of Close button or activation of monit./entrapment protection devices will reverse the door to fully open position.
B2 Mode	**SET SELECT SWITCH ON *B2 = 1***	**T Mode**	**SET SELECT SWITCH ON *T = 4***
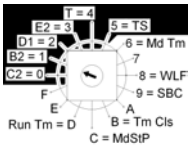 Selector switch position on **1**	**Function:** Momentary contact to Open, Close and Stop with 3-button station. Activation of monit./ entrapment protection devices will reverse the door during closing. Auxiliary devices function as an Open-Close controls and will reverse the door while closing.	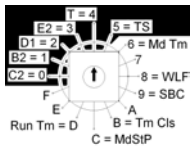 Selector switch position on **4**	**Function:** Under Mode T=4, if monit./entrapment protection devices are activated while door is closing, the door will reverse and will not close by Timer to Close (TTC). TTC will also be disabled if the chain hoist is engaged or if the stop is activated before elapsed time. TTC will resume its normal operation only after the door is fully closed.
D1 Mode	**SET SELECT SWITCH ON *D1 = 2***	**TS Mode**	**SET SELECT SWITCH ON *TS = 5***
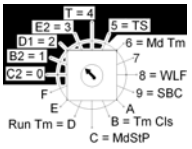 Selector switch position on **2**	**Function:** Constant-pressure-to-open and constant-pressure-to-close. Activation of monit./entrapment protection devices will stop the door while closing.	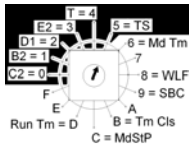 Selector switch position on **5**	**Function:** Under Mode TS=5, if monit./entrapment protection devices are activated while door is closing, the door will reverse and will close by Timer to Close (TTC). TTC will also be refreshed if the chain hoist is engaged, if the stop is activated before elapsed time or in the case of a power outage.

T (4) & TS (5) Mode: Only applicable with Timer to Close, refer to Features Programming section, p. 16.

1.3.2 Features Programming

NOTICE
• Always return the door to **fully closed position** before performing any program settings.

Maximum Run Timer

Maximum run timer is set to 90 seconds by default. When programmed, this feature calculates the total time required for the door to travel from the fully closed to the fully opened position and adds 10 seconds to this time. Therefore, if the door is obstructed while travelling up or down, this feature will stop the operator after the maximum run timer time has elapsed.

Run Timer Programming	Select Switch	Set Run Timer to Default
1. Verify if the close limit switch is activated and if the close LED is ON. 2. Set select switch on ***D = Run Tm***. 3. Press the "Open" button and let the door reach the fully opened position. **Result: 10 sec** is added to the total travel time. 4. Set select switch on run mode ***(0, 1, 2, 3, 4 or 5)***.	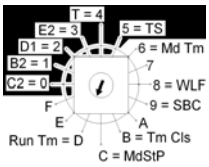	1. Verify if the close limit switch is activated and if the close LED is ON. 2. Set select switch on ***D = Run Tm***. 3. Press the "Stop" button. **Result:** The max. run timer is set to the default value of **90 sec**. 4. Set select switch on run mode ***(0, 1, 2, 3, 4 or 5)***.

Timer to Close (TTC)

Timer to Close (T = 4 or TS = 5 Mode), will close the door from the fully opened and mid-stop positions after a factory preset time (5 sec.). Timer to Close can be programmed in increments of 1 sec. or 15 sec.

TTC Programming	Select Switch	TTC Deactivation
1. Verify if the close limit switch is activated and if the close LED is ON. 2. Set select switch on ***B = Tm Cls***. 3. Press the "Stop" button to return the time to **0 sec.** or to reprogram. 4. Press the "Open" button to add 15 sec. increments, or press the "Close" button to add 1 sec. increments. Max. 4 min. 5. Set select switch on ***T = 4 or TS = 5***. Refer to Run Mode Settings section, p. 15 for mode descriptions.	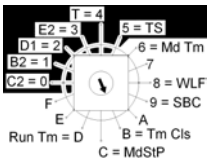	1. If the TTC is not required, set select switch on run mode ***(0, 1, 2, or 3)***.

Timer to Close User Suspension Feature

This feature allows the Timer to Close to be enabled/disabled from the floor by using a wall push-button station. This feature allows the user to keep the door opened for ONE CYCLE only.

TTC Deactivation	TTC Activation
While the door is in the closed position, by pressing the "Stop" button 3 times and the "Close" button 3 times consecutively on the push-button station, the TTC is deactivated (*TTC is suspended*).	The TTC is re-activated (*TTC returns to normal function*) when the door is closed.

Mid-Stop (MD STP)

NOTICE
• The Mid-Stop position must always be programmed/adjusted so that there is a minimum gap of 12” between the top of the tallest vehicle and the bottom edge of the door.

Mid-Stop, when activated, will allow the door to stop at a predetermined position when an open signal is given from the fully closed position. The Radio control or Close push-button will close the door from the mid-stop position. The door will open fully from mid-stop position if the Open button is activated.

Mid-Stop Activation	Select Switch	Mid-Stop Deactivation
1. Verify if the close limit switch is activated and if the close LED is ON. 2. Set select switch on ***C = MdStP***. 3. Press the “Open” button. While door is moving press “Stop” button at desired (mid-stop) position. 4. Set select switch on run mode ***(0, 1, 4, or 5)***.	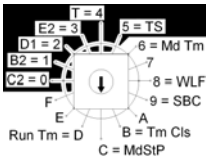	1. Verify if the close limit switch is activated and if the close LED is ON. 2. Set select switch on ***C = MdStP***. 3. Press the “Stop”, “Close” and “Open” buttons consecutively. 4. Set select switch on run mode ***(0, 1, 2, 3, 4 or 5)***.

Mid-Stop Timer (MD TM)

This feature allows the Timer to Close to be enabled/disabled at the Mid-Stop position.

MD TM Activation	Select Switch	MD TM Deactivation
1. Verify if the close limit switch is activated and if the close LED is ON. 2. Set select switch on ***6 = Md Tm***. 3. Press the “Close” button. 4. Set select switch on run mode ***(4, or 5)***.	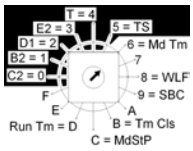	1. Verify if the close limit switch is activated and if the close LED is ON. 2. Set select switch on ***6 = Md Tm***. 3. Press the “Stop” button. 4. Set select switch on run mode ***(0, 1, 2, 3, 4 or 5)***.

Single-Button Control (SBC)

With this feature, it is possible to use a single-channel transmitter for a Commercial Application, as well as a Single-Button Control (SBC). The SBC provides the user with the possibility to open, stop or close the door by using a single-button radio transmitter (or a single push-button station).

SBC Activation	Select Switch	SBC Deactivation
1. Verify if the close limit switch is activated and if the close LED is ON. 2. Set select switch on ***9 = SBC***. 3. Press the “Open” button. 4. Set select switch on run mode ***(1, 4, or 5)***.	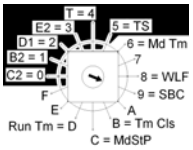	1. Verify if the close limit switch is activated and if the close LED is ON. 2. Set select switch on ***9 = SBC***. 3. Press the “Stop” button. 4. Set select switch on run mode ***(0, 1, 2, 3, 4 or 5).***

Universal Auxiliary Output Module (8 = WLF)

The universal auxiliary output module is sold separately. The module allows for the connection of external devices such as: red and green warning lights (custom sequences available, ask Manaras-Opera for details), air curtains, horns, locks, etc...

Please contact your dealer or our inside sales department at **1-800-361-2260** for further information.

2 On-Board Radio Receiver

The On-Board Radio Receiver is factory installed on all operators equipped with an Electronic Control Board **BOARD 070** and features Rolling Code Technology.

2.1 Radio Receiver Components and Compatible Transmitting Devices

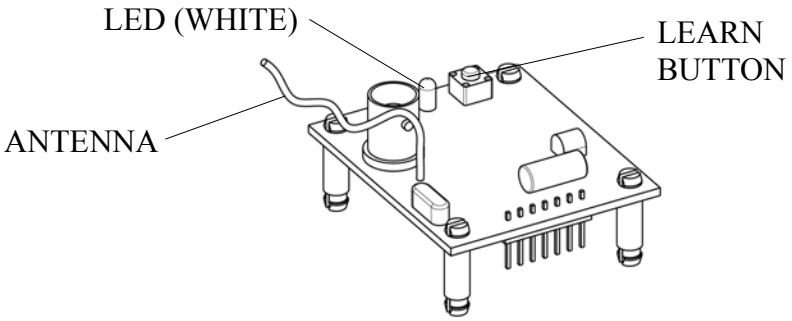

Each Receiver is compatible with the devices listed below:

Note: You can match 3-Button Transmitters AND 1-Button Transmitters with the same Receiver. Mix and match accordingly for your application (ordered separately). One receiver will accept up to 50 Transmitters.

- **RADIOEM 101:** 1-Button Opera Brand Transmitter for operation of a Single Door. Can be configured as a traditional commercial sequence or as a Single Button Control (The SBC provides the user with the possibility to open/stop/close the door by using a single-button radio transmitter (or a single push-button station).
- **RADIOEM 103 SD:** 3-Button Opera Brand Transmitter for operation of a Single-Door (open/stop/close function) (field selectable).
- **RADIOEM 103 MD:** 3-Button Opera Brand Transmitter for operation of Multiple-Doors (open function) (field selectable).
- **KEYLESS 042:** Wireless Entry Transmitter for keyless access to a Single or Multiple-Doors.
- Other soon to be offered Opera Brand devices; 3-button mini key-chain transmitter, multi-channel receiver, etc...

2.2 Programming Instructions

Radio Receiver Programming Instructions	
To MATCH a Transmitter to the Receiver	**To DELETE ALL Transmitters from the Receiver memory**
1. HOLD the Receiver's **LEARN** button until the LED flashes (approx. 2 sec.) (frequency of 1 sec. ON / 1 sec. OFF). 2. HOLD any button on the Transmitter until the Receiver's LED stops flashing.	1. HOLD the Receiver's **LEARN** button until the LED flashes (approx. 10 sec.) (frequency of 1/3 sec. ON / 1/3 sec. OFF).

2.3 Radio Control Functions – 1 and 3-Button Transmitters

Table 3 - Radio Control Functions - 1-Button Transmitter RADIOEM101

Transmitter	Modes	Functions	Programming (On operator's ECB)
 1-Button Transmitter **RADIOEM101**	Commercial Sequence - 1-Button	OPEN / CLOSE → Button **Door is CLOSED:** - Click Button → Door OPENS FULLY **During UPWARD Travel:** - Click Button → Nothing happens **Door is OPENED:** - Click Button → Door CLOSES FULLY **During DOWNWARD Travel:** - Click Button → Door reverses and OPENS FULLY **Door is STOPPED:** - Not possible in this mode. Door is either FULLY OPENED or FULLY CLOSED.	Standard default mode. 1. Door is in fully CLOSED position. 2. On ECB, verify if the close limit switch is activated (CLOSE LED is ON). 3. On ECB, set select switch on **9 = SBC**. 4. On ECB, press "**STOP**" button. 5. On ECB, select run mode **(1, 4, or 5)**.
	Single Button Control (SBC) Available with the Electronic Control Board (ECB) only. Alternating Sequence	OPEN / STOP / CLOSE → Button **Door is CLOSED:** - Click Button → Door OPENS **During UPWARD Travel:** - Click Button → Door STOPS **Door is STOPPED:** - Click Button → Door CLOSES **During DOWNWARD Travel:** - Click Button → Door STOPS **Door is STOPPED:** - Click Button → Door OPENS **Note**: If the door is STOPPED for more than 2 minutes, the next movement will be UPWARD regardless of the previous movement.	1. Door is in fully CLOSED position. 2. On ECB, verify if the close limit switch is activated (CLOSE LED is ON). 3. On ECB, set select switch on **9 = SBC**. 4. On ECB, press "**OPEN**" button. 5. On ECB, select run mode **(1, 4, or 5)**.

Table 4 - Radio Control Functions – 3-Button Transmitter RADIOEM103SD/MD

Transmitter	Modes	Functions	Programming
	Three Button Transmitter	1. OPEN → Small Button 2. CLOSE → Medium Button 3. STOP → Large Button	1. Unscrew the screw on the back of the Transmitter. 2. Insert a flat screwdriver in the rounded corner of the Transmitter. 3. Pry open the Transmitter's cover. 4. Position jumper on **SD** (Single Door). 5. Put the Transmitter's cover back-on and fasten the screw. 6. On ECB, select run mode **(1, 4, or 5)**.
3-Button Transmitter **RADIOEM 103SD/MD**	3 x 1-Button	1. DOOR #1 → Small Button 2. DOOR #2 → Medium Button 3. DOOR #3 → Large Button Each button acts separately as a 1-Button Transmitter (Commercial Sequence or SBC depends on operator settings).	1. Unscrew the screw on the back of the Transmitter. 2. Insert a flat screwdriver in the rounded corner of the Transmitter. 3. Pry open the Transmitter's cover. 4. Position jumper on **MD** (Multiple Doors). 5. Put the Transmitter's cover back-on and fasten the screw. 6. On ECB, select run mode **(1, 4, or 5)**.

Notes

Notes

Warranty

Manaras-Opera warrants its operators to be free from defects in material and workmanship under normal and proper use for a period of two years from date of invoice, unless otherwise stated. Mechanical, electrical and electronic accessories are warranted for one year from date of invoice, unless otherwise stated. Wearing parts such as clutch pads, v-belts, and brake bands are excluded from warranty.

Manaras-Opera's only obligation shall be to repair or replace defective equipment which does not conform to the warranty. Manaras-Opera shall not be liable for any injury, loss or damage, direct or consequential, arising out of the inability to use the equipment. Before using, Buyer and/or the ultimate User shall determine the suitability of the product for its intended use, and User assumes all risks and liability in connection therewith. The foregoing may not be changed except by an Agreement signed by an authorized representative of Manaras-Opera.

The articles that are replaced pursuant to the terms of this warranty shall be retained by Manaras-Opera, and the User is responsible for any freight costs relating to repair or replacement.

The foregoing warranty is exclusive and in lieu of all other warranties of quality, whether written, oral or implied (including any other warranty of merchantability or fitness for purpose).

The following are exclusions from warranty:

- If usage, product modification, adaptation or installation are not in accordance with our installation and operating instructions.
- If the product has been opened, dismantled or returned with clear evidence of abuse or other damage.
- If our written specifications are not properly applied by the Buyer when selecting the equipment.
- If our written instructions for installation and wiring of the electrical connections have not been followed.
- If our equipment has been used to perform functions other than the functions it was designed to handle.
- If Manaras-Opera equipment is used with electrical accessories (switches, relays, etc.) that have not been previously approved in writing by the Manaras-Opera Engineering Department.
- If electrical accessories and other components have been used in disregard of the basic wiring diagram for which they were designed.

All costs related to installation and re-installation of the Manaras-Opera equipment covered by this warranty are not the responsibility of Manaras-Opera. Manaras-Opera will not be responsible for any consequential damages following installation procedures performed by the Buyer or the User. If the Buyer resells any Manaras-Opera products to another Buyer or User, it shall include all of the terms and provisions of this warranty in such resale. Manaras-Opera's responsibility to any such Third Party shall be no greater than Manaras-Opera's responsibility under the warranty to the original Buyer.

Returns

No returns will be accepted without prior written authorization by Manaras-Opera. All returns must be accompanied by a Return Authorization Number issued by Manaras-Opera, and all unauthorized returns will be refused. The return shipment is to be freight prepaid by the Buyer, and under no circumstances shall the Buyer deduct the value of the returned merchandise from any remittance due. A restocking fee of 15% of the Manaras-Opera sale price will be charged for all returns not covered under warranty.

2X FASTER*

RAPIDO™
TWICE AS FAST

OPEN AND CLOSE YOUR DOOR TWICE AS FAST WITH A RAPIDO OPERATOR FROM MANARAS-OPERA.

The RAPIDO™ features a door speed up to 2 times faster than standard models available to the commercial and industrial door market.

The RAPIDO™ increases the longevity of the complete door system, designed to speed-up industrial standard lift sectional doors while smoothly managing soft-starts and soft-stops.

CHOOSING THE RAPIDO™ IS SIMPLE WHEN TIME AND ENERGY SAVINGS IS A MUST.

On-board control and monitoring of external entrapment protection devices, provide speed managing features and enhanced performance and reliability.

*The RAPIDO™ operator is up to 2X the speed of a standard jackshaft operator.

CALL US FOR MORE INFORMATION: 1-800-361-2260

www.manaras.com

Manaras Opera®

- MEMBER OF THE CANIMEX GROUP -